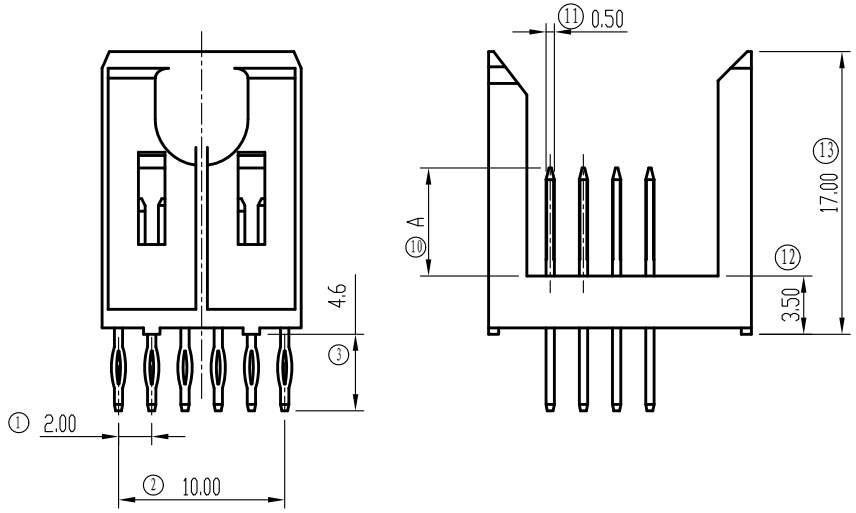

CODE	DIM "A"
2	5.75
3	6.50
4	7.25
5	8.00

Performance characteristics:

1. Main body part material
   Insulator: LCP NATURE COLOR UL94V-0
   Contact terminal: Copper Alloy, Ni 1.27μm Min. Underplated over all. mate area plating see part number rule, Sn plated at tail
2. Electrical requirements:
   Insulation resistance: ⩾1000 MΩ
   Withstanding voltage: 1000 Vr.m.s, 1mA, 60s
3. Environment specification
   Working temperature: -55℃~+125℃
4. Applicable standard: IEC61076-4-104
5. Packing & storing
   Method of packing: Tube, inner box, outer box
   Storing condition: temperature of -10℃~+40℃
   below 80% relative humidity
6. Style of installation: Press-fit pcb installation
7. To prevent the pollution of the environment product info
   RoHS agreement: In line with the european union RoHS

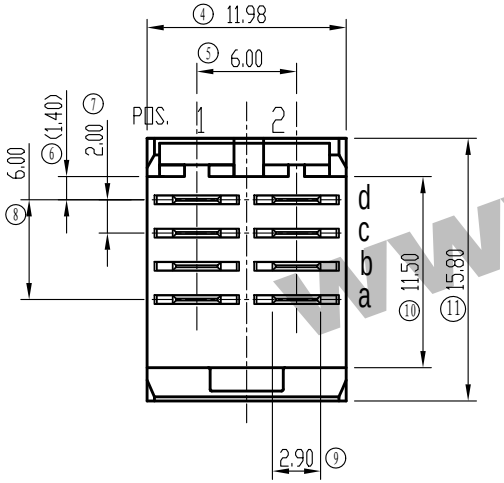

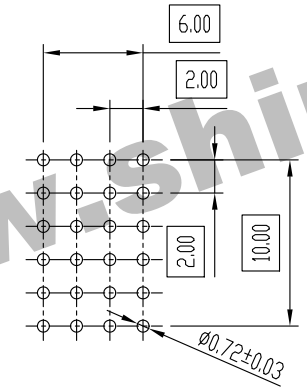

RECOMMENDED PCB LAYOUT

1795 - 42 X- X X - X

Series code

Model code	
Code	Definition
42	4x2

Contact pattern code	
Code	Definition
2	see Contact Loading pattern table
3	
5	
X	Customized

Tail length code	
Code	Definition
1	4.60
X	Customized

Plating code		
Code	Definition	
	Contact plating	Tail plating
6	Au 0.25μm	Sn
7	Au 0.38μm	
8	Au 0.76μm	
E	PdNi 0.38μm+Gold flash	
F	PdNi 0.76μm+Gold flash	
X	Customized	

Insulator material&color	
Code	Definition
N	LCP Nature UL94V-0

Unless otherwise specified tolerance:

X.	±0.50	X.°	±3°
.X	±0.38	.X°	±2°
.XX	±0.25		

Mark	NO.	File NO.	Signature	Date
DRAW		Lawrence 2014.12.01		
CHK		Alan2014.12.18		
MAN		Eva2014.12.18		
STD		ZhiJian Jiang2014.12.18		
APP				

HM1 Series 2mm Signal Right Angle Male Press fit Power Connector (4x2)

1795-42X-1X-N

SL0.1795.001

Projection	Rev.	Weight	Scale
	A0		

All Dimensions in mm | Sheet 1 of 2

SHINNING SHENZHEN SHINNING ELECTRONIC CO.,LTD.

www.shinning.com.cn

Contact pattern code	2	
ROW	CONTACT CODE	
	1	2
d	2	2
c	2	2
b	2	2
a	2	2

Contact pattern code	3	
ROW	CONTACT CODE	
	1	2
d	3	3
c	3	3
b	3	3
a	3	3

Contact pattern code	5	
ROW	CONTACT CODE	
	1	2
d	3	3
c	3	3
b	3	3
a	5	5

Contact Loading pattern

www.shinning.com.cn

Unless otherwise specified tolerance:

X.	±0.50	X.°	±3°
.X	±0.38	.X°	±2°
.XX	±0.25		

Mark	NO.	File NO.	Signature	Date
DRAW		Lawrence 2014.12.01		
CHK		Alan2014.12.18		
MAN		Eva2014.12.18		
STD		ZhiJian Jiang2014.12.18		
APP				

HM1 Series 2mm Signal Right Angle Male Press fit Power Connector (4x2)

1795-42X-1X-N

SL0.1795.001

Projection	Rev.	Weight	Scale
	A0		

All Dimensions in mm | Sheet 2 of 2

SHINNING SHENZHEN SHINNING ELECTRONIC CO.,LTD.